Circuit Intro:

1

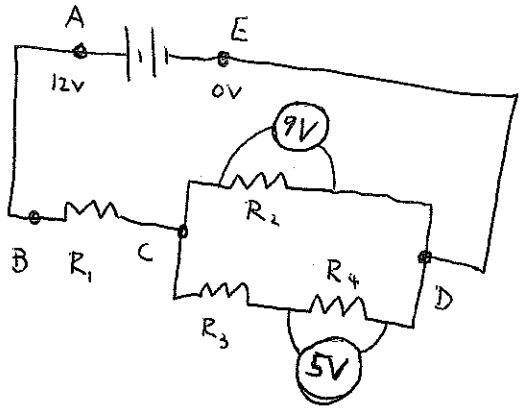

a. Find ΔV_1, ΔV_3, ΔV_T

b. Find V_A, V_B, V_C, V_D, V_E

c. If $R_1 = 100\Omega$ Find: R_{BD}

d. If $R_1 = 100\Omega$ and $R_3 = 400\Omega$ Find R_2 and R_4

2.

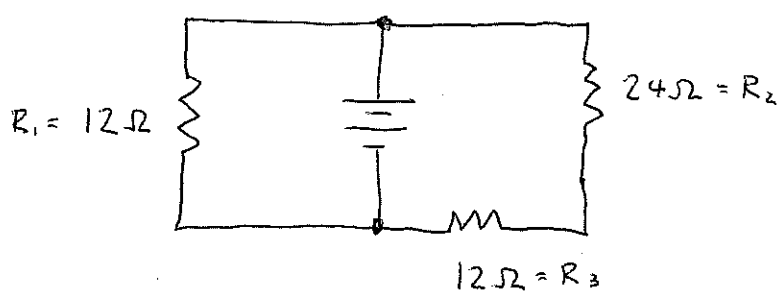

If $\Delta V_3 = 2.0\Omega$ Find: ΔV_1, ΔV_2, ΔV_T, I_1, I_2, I_3 and I_T.

3.

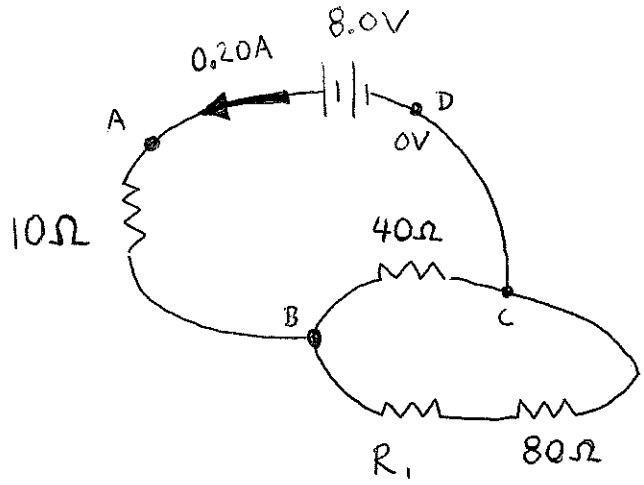

a. Find V_A, V_B, V_C

b. Find R_1

4. $V_G = 0V$

$V_E = 12V$

$V_B = 8V$

$V_A = 2V$

$R_6 = 10\Omega$

$R_1 = 2\Omega$

$I_2 = 0.1A$

$R_3 = 80\Omega$

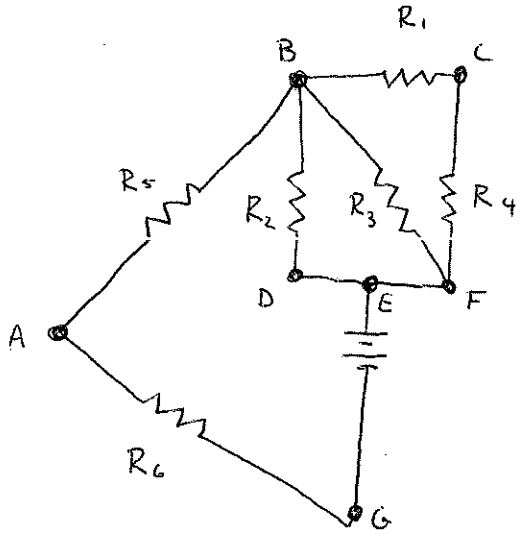

Find R_2, R_4, R_5