Circuits Practice, Just 3 Simple Rules!

1. Consider the circuit shown to the right.

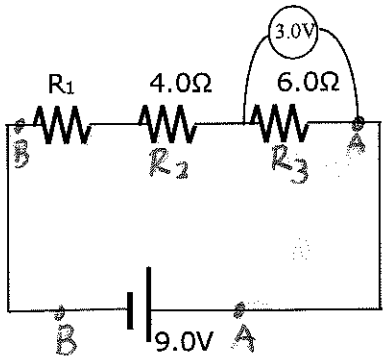

a. Find the current in the 6.0Ω resistor.
b. Find the potential difference across the 4.0Ω resistor.
c. Find the potential difference across R_1.
d. Find the value of R_1.

a. $I_3 = \frac{\Delta V_3}{R_3} = 0.50A$

b. $I_3 = I_2 = I_1$; $\Delta V_2 = I_2 R_2 = 2.0V$

c. $\Delta V_{AB} = 9.0V = \Delta V_1 + \Delta V_2 + \Delta V_3 \Rightarrow \Delta V_1 = 4.0V$

d. $R_1 = \frac{\Delta V_1}{I_1} = 8.0\Omega$

e. $P_1 = I_1 V_1$
$P_1 = 2.0W$

2. Consider the circuit shown to the right.
Find the value of R_1.

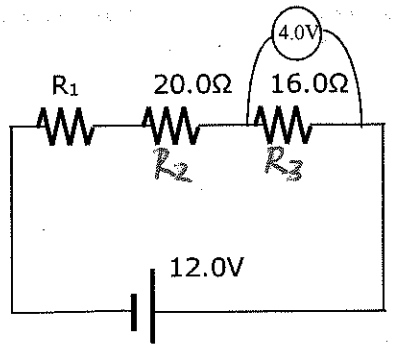

a. $I_3 = \frac{\Delta V_3}{R_3} = 0.25A = I_2 = I_1$

$\Delta V_2 = I_2 R_2 = 5.0V$

$\Delta V_1 = 12V - (5V + 4V) = 3.0V$

$R_1 = \frac{\Delta V_1}{I_1} = 12\Omega$

b. $P_1 = I_1 V_1$
$= 0.75W$

3.

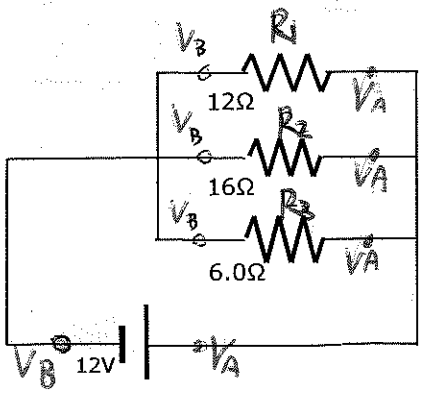

a. Find the potential difference across each resistor.
$\Delta V_1 = \Delta V_2 = \Delta V_3 = 12V = \Delta V_{AB}$
b. Find the current in each resistor.
$I_1 = \frac{\Delta V_1}{R_1} = 1.0A$; $I_2 = \frac{\Delta V_2}{R_2} = 0.75A$, $I_3 = \frac{\Delta V_3}{R_3} = 2.0A$
c. Find the power of each resistor.
$P_1 = \Delta V_1 I_1 = 12W$, $P_2 = \Delta V_2 I_2 = 9.0W$, $P_3 = \Delta V_3 I_3 = 24W$
d. Find the current leaving the battery.
$I_T = I_1 + I_2 + I_3 = 3.75A$
e. Find the power of the battery.
$P = IV = 45W = P_1 + P_2 + P_3$
f. Find the total resistance of the circuit.
$R_{AB} = \frac{\Delta V_{AB}}{I_{AB}} = \frac{12V}{3.75A} = 3.2\Omega$

4..

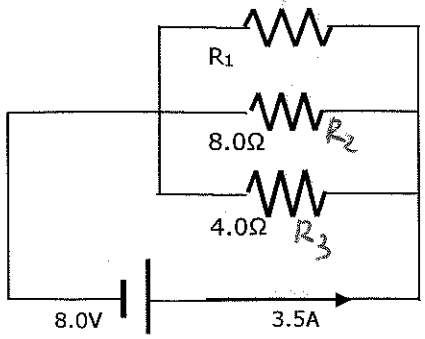

a. Find the potential difference across each resistor.
8.0V
b. Find the current in each resistor.
$I_2 = 1.0A$ $I_3 = 2.0A$ $I_1 = I_T - (I_2 + I_3) = 0.50A$
c. Find R_1
$R_1 = \frac{\Delta V_1}{I_1} = 16\Omega$
d. Find R_T
$R_T = \frac{\Delta V_T}{I_T} = \frac{8.0V}{3.5A} = 2.3\Omega$